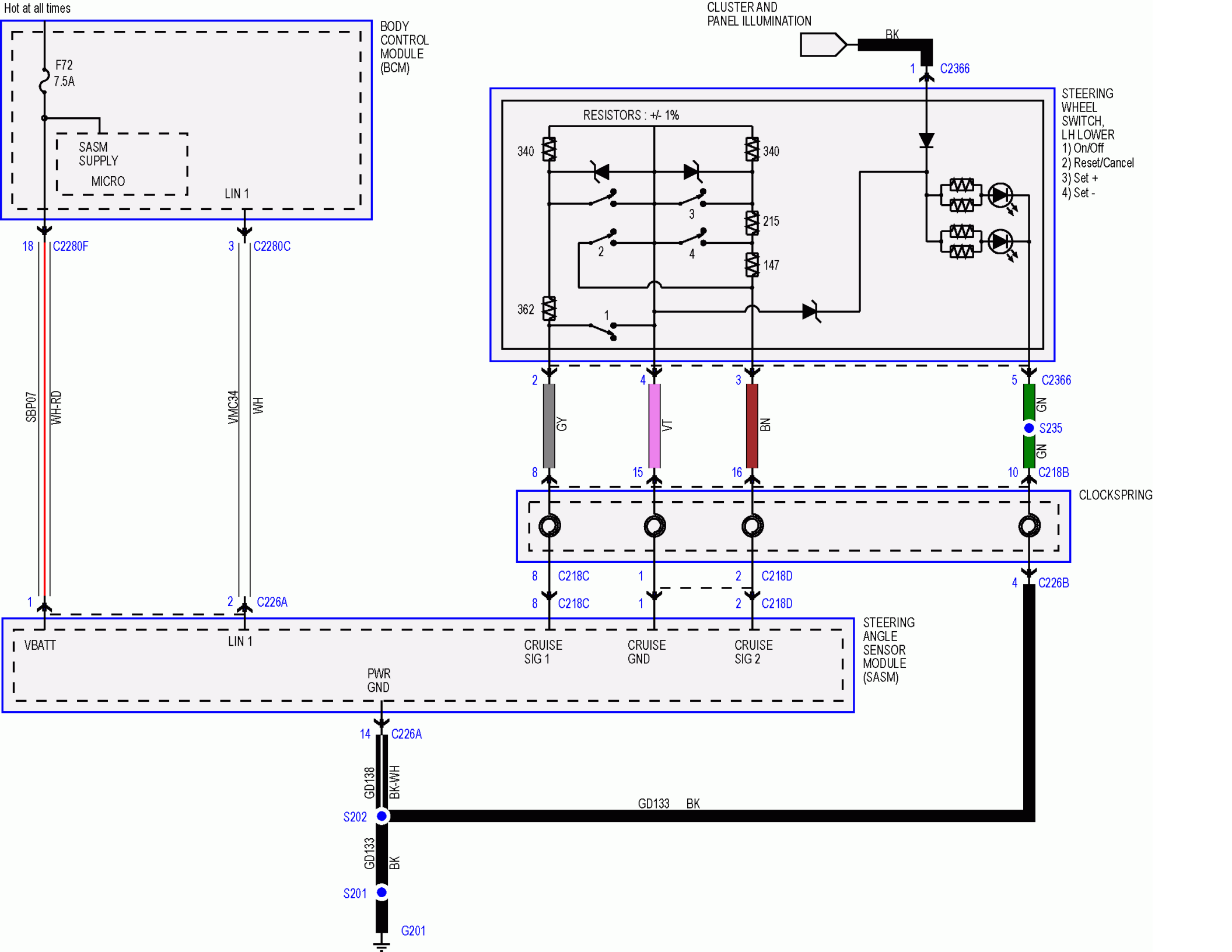
Hot at all times
BODY CONTROL MODULE (BCM)
F72
7.5A
SASM SUPPLY
MICRO
LIN 1
18
C2280F
3
C2280C
SBP07
WH-RD
VMC34
WH
1
2
C226A
VBATT
LIN 1
CLUSTER AND PANEL ILLUMINATION
BK
1
C2366
STEERING WHEEL SWITCH, LH LOWER
1) On/Off
2) Reset/Cancel
3) Set +
4) Set -
RESISTORS : +/- 1%
340
340
215
147
362
1
2
3
4
2
4
3
5
C2366
GY
VT
BN
GN
S235
GN
8
15
16
10
C218B
CLOCKSPRING
8
C218C
1
2
C218D
4
C226B
8
C218C
1
2
C218D
CRUISE SIG 1
CRUISE GND
CRUISE SIG 2
STEERING ANGLE SENSOR MODULE (SASM)
PWR GND
14
C226A
GD138
BK-WH
S202
GD133
BK
GD133
BK
S201
G201

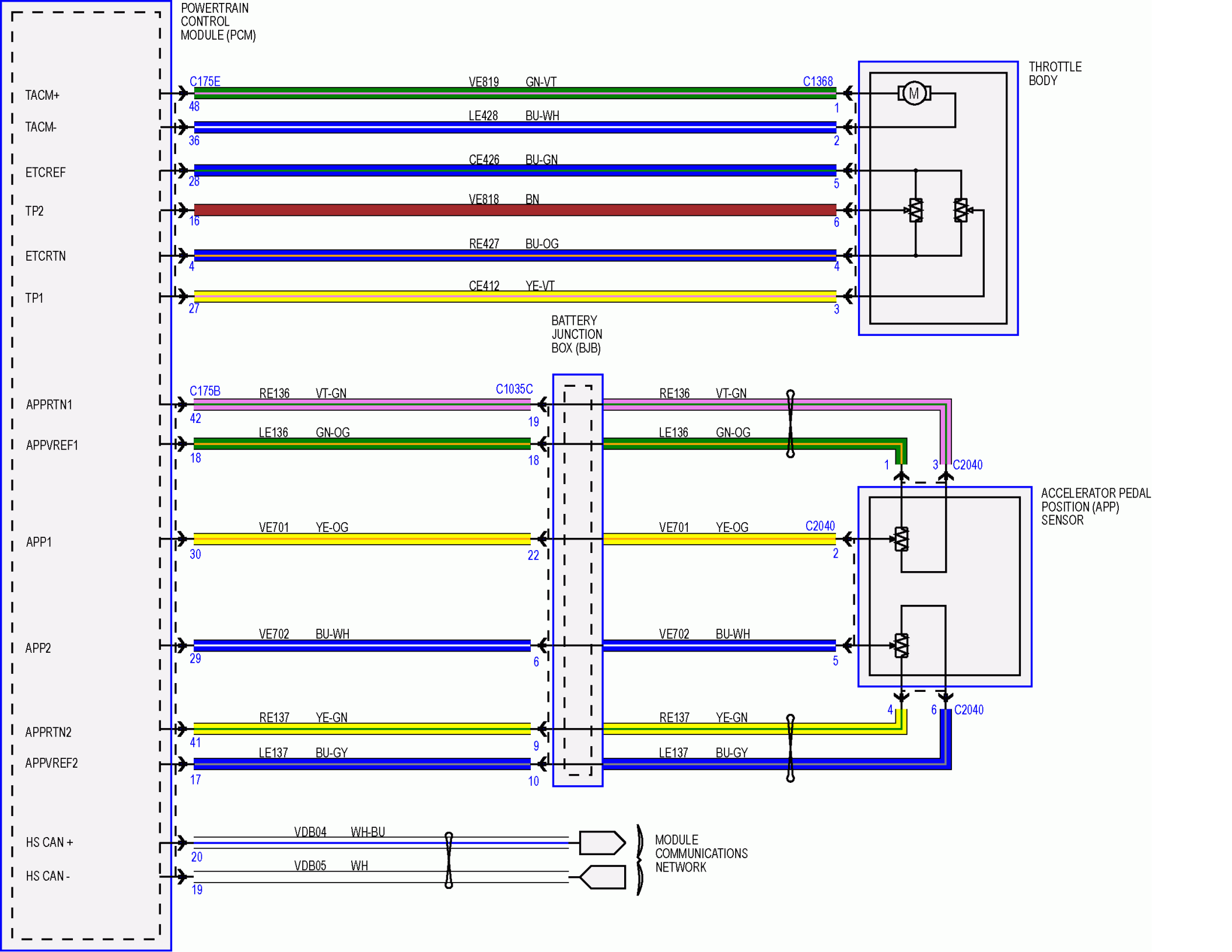
POWERTRAIN CONTROL MODULE (PCM)
TACM+
TACM-
ETCREF
TP2
ETCRTN
TP1
APPRTN1
APPVREF1
APP1
APP2
APPRTN2
APPVREF2
HS CAN +
HS CAN -
C175E
48
36
28
16
4
27
VE819 GN-VT
LE428 BU-WH
CE426 BU-GN
VE818 BN
RE427 BU-OG
CE412 YE-VT
C1368
1
2
5
6
4
3
THROTTLE BODY
M
BATTERY JUNCTION BOX (BJB)
C175B
42
18
30
29
41
17
RE136 VT-GN
LE136 GN-OG
VE701 YE-OG
VE702 BU-WH
RE137 YE-GN
LE137 BU-GY
C1035C
19
18
22
6
9
10
C2040
1
3
2
5
4
6
ACCELERATOR PEDAL POSITION (APP) SENSOR
VDB04 WH-BU
VDB05 WH
20
19
MODULE COMMUNICATIONS NETWORK

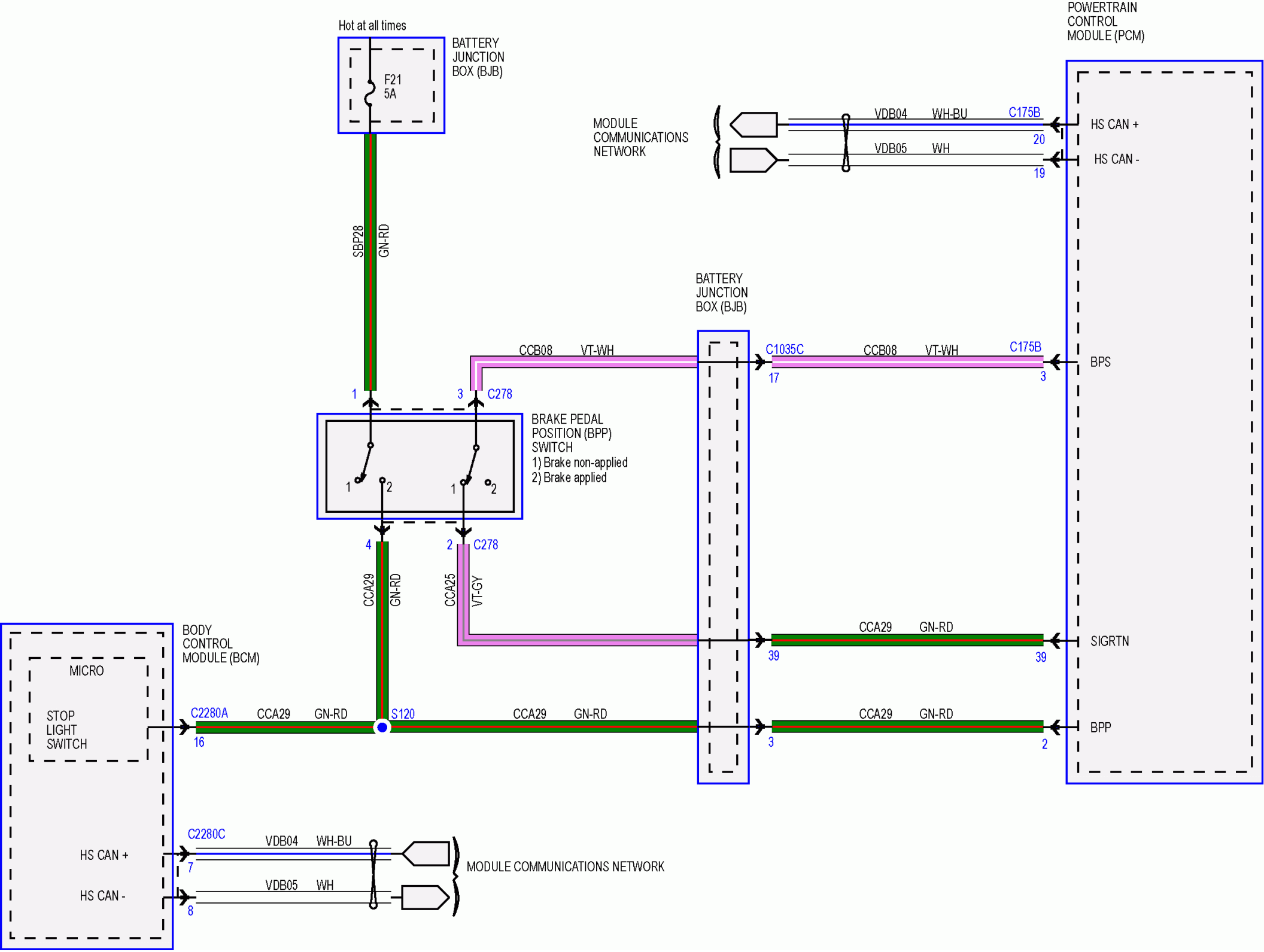
Hot at all times
BATTERY JUNCTION BOX (BJB)
F21
5A
SBP28
GN-RD
POWERTRAIN CONTROL MODULE (PCM)
MODULE COMMUNICATIONS NETWORK
VDB04
WH-BU
C175B
20
HS CAN +
VDB05
WH
19
HS CAN -
BATTERY JUNCTION BOX (BJB)
CCB08
VT-WH
C1035C
17
CCB08
VT-WH
C175B
3
BPS
1
3
C278
BRAKE PEDAL POSITION (BPP) SWITCH
1) Brake non-applied
2) Brake applied
4
2
C278
CCA29
GN-RD
CCA25
VT-GY
CCA29
GN-RD
39
39
SIGRTN
BODY CONTROL MODULE (BCM)
MICRO
STOP LIGHT SWITCH
C2280A
CCA29
GN-RD
S120
CCA29
GN-RD
16
CCA29
GN-RD
3
2
BPP
C2280C
VDB04
WH-BU
7
HS CAN +
VDB05
WH
8
HS CAN -
MODULE COMMUNICATIONS NETWORK