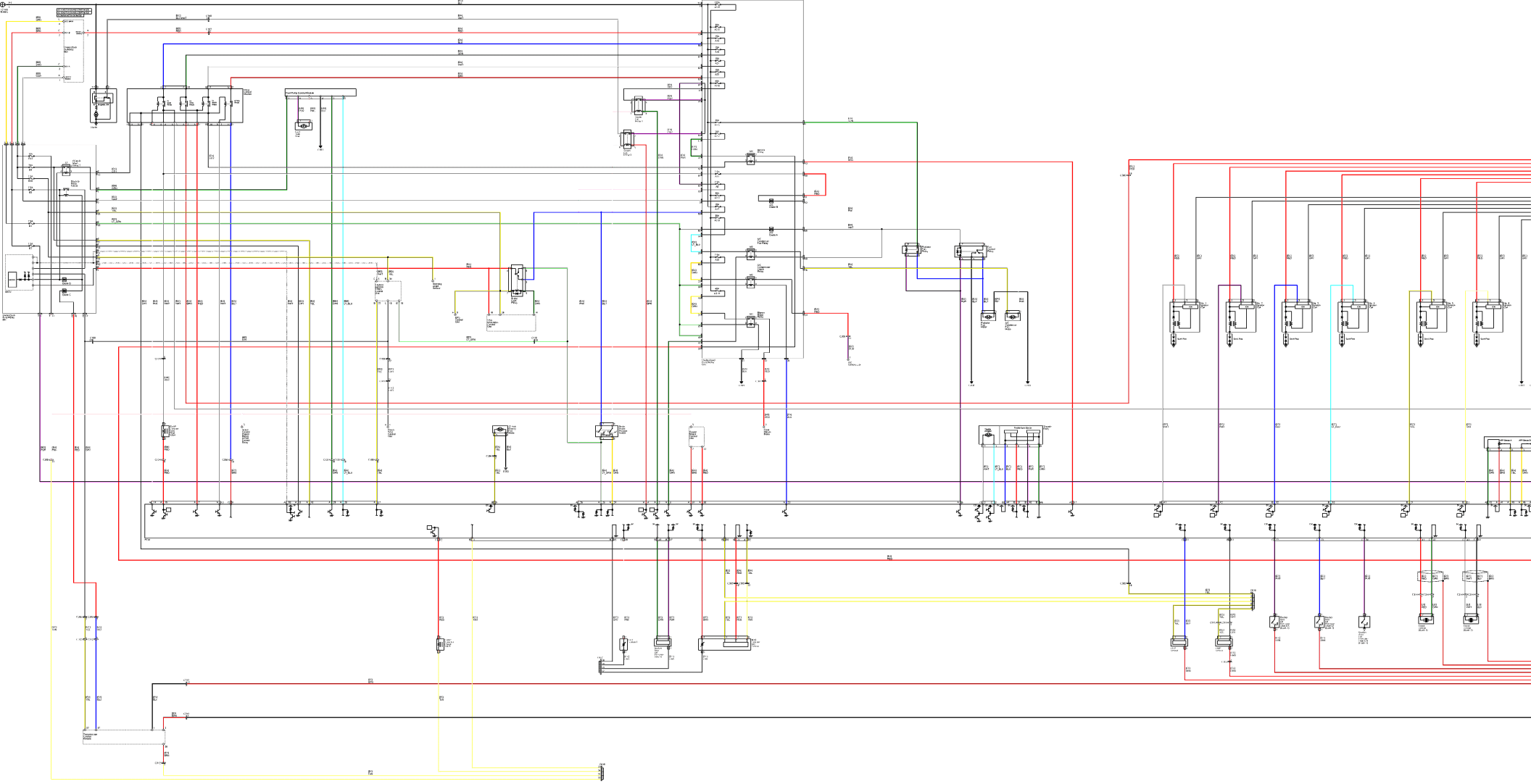

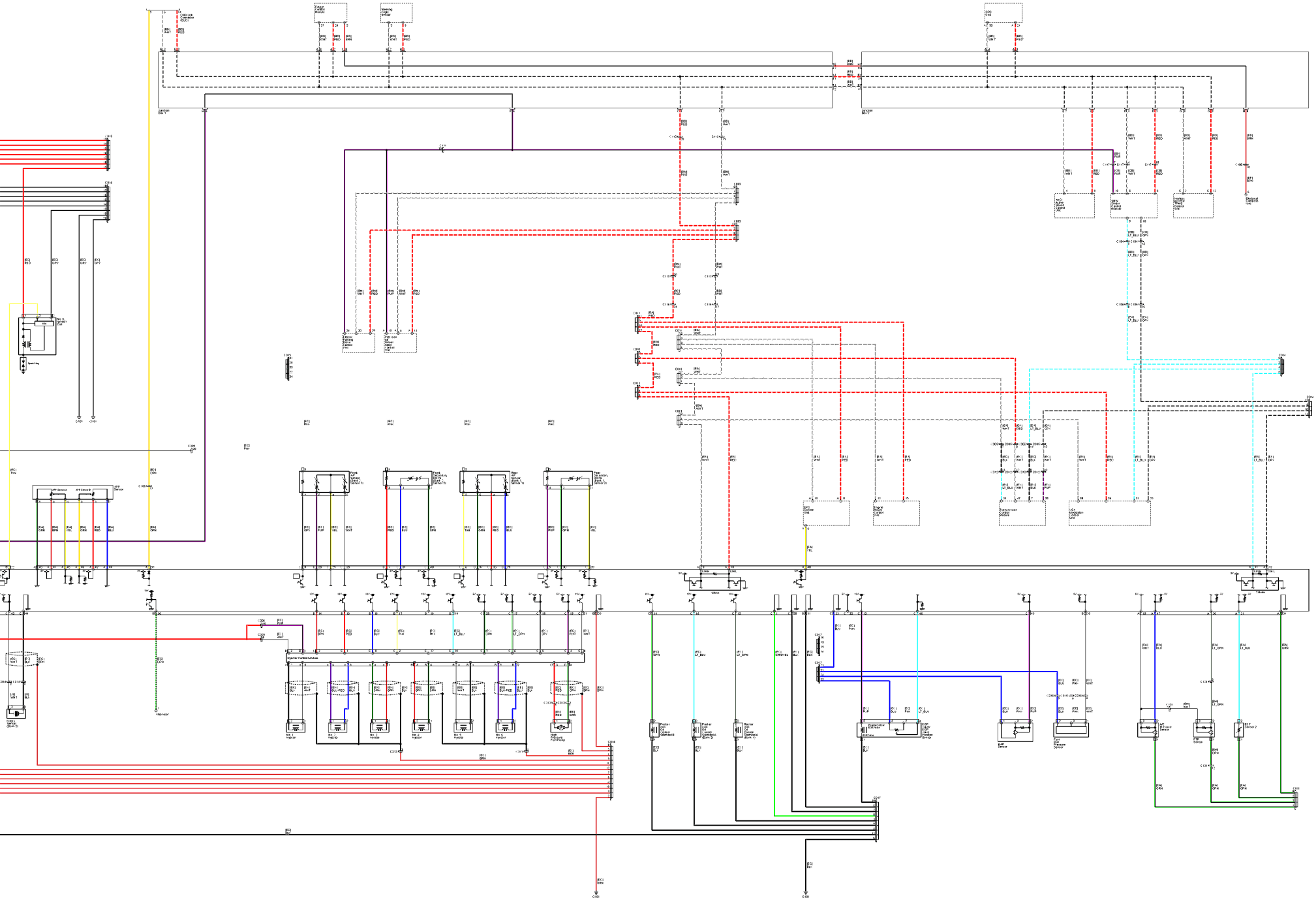

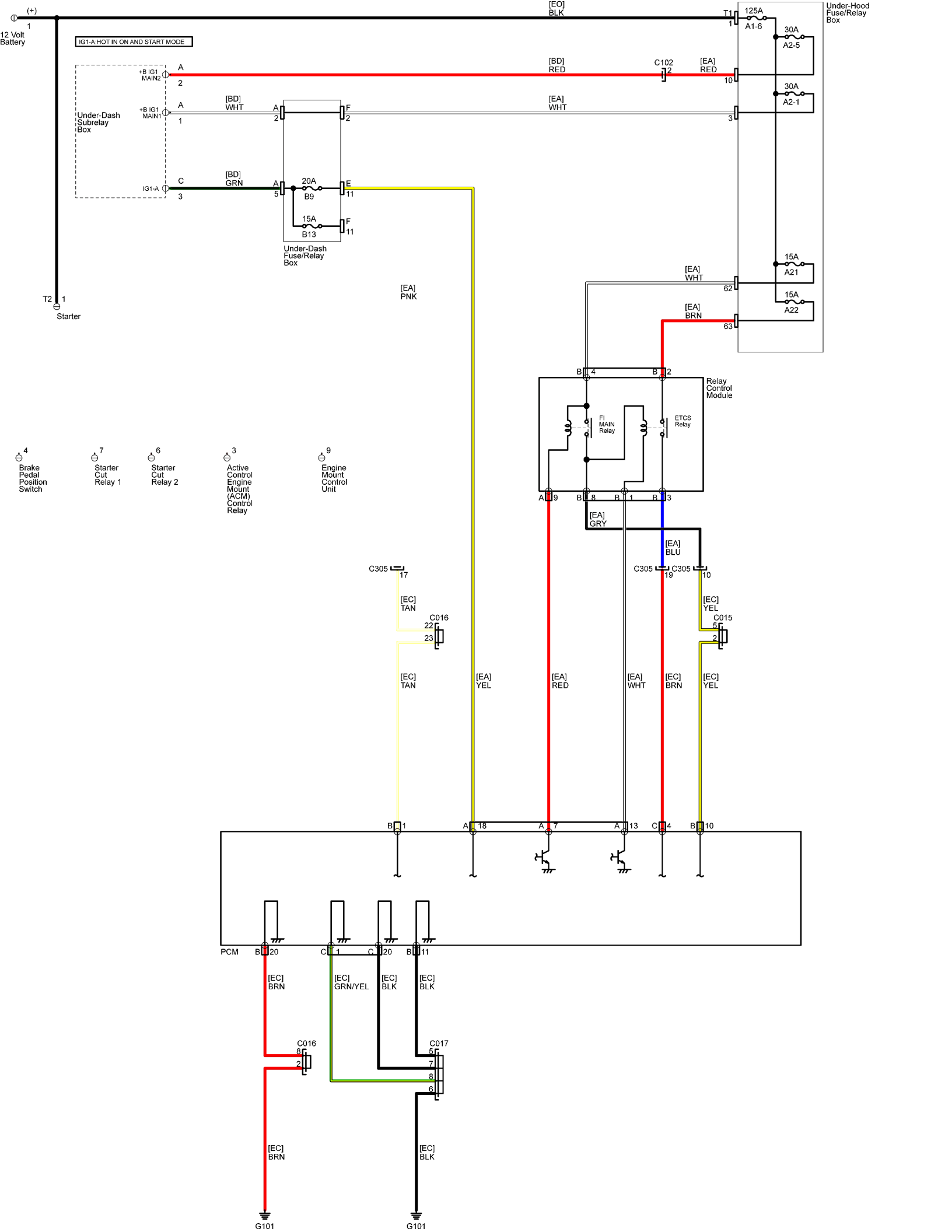
(+)
12 Volt Battery
IG1-A:HOT IN ON AND START MODE
[EO] BLK
Under-Hood Fuse/Relay Box
125A A1-6
30A A2-5
30A A2-1
15A A21
15A A22
[BD] RED
C102
[EA] RED
Under-Dash Subrelay Box
+B IG1 MAIN2
+B IG1 MAIN1
IG1-A
[BD] WHT
[EA] WHT
[BD] GRN
20A B9
15A B13
Under-Dash Fuse/Relay Box
T2
Starter
[EA] PNK
[EA] WHT
[EA] BRN
Relay Control Module
FI MAIN Relay
ETCS Relay
Brake Pedal Position Switch
Starter Cut Relay 1
Starter Cut Relay 2
Active Control Engine Mount (ACM) Control Relay
Engine Mount Control Unit
[EA] GRY
[EA] BLU
C305
[EC] TAN
C016
[EC] YEL
C015
[EC] TAN
[EA] YEL
[EA] RED
[EA] WHT
[EC] BRN
[EC] YEL
PCM
[EC] BRN
[EC] GRN/YEL
[EC] BLK
[EC] BLK
C017
[EC] BRN
[EC] BLK
G101
G101